BH-HCS

630A top bus-bar hard metal connection system

Features/Applications:

BH-HCS 630A top bus-bar hard metal connection system is made of EPDM rubber, mainly applied for the top connection of RMU and cable branch system to fit the loaded switch socket with sealing and insulation function; such special designed connector can be also made screened or unscreened, the RMU can be made more compact and reliable with such special designed connector to balance performance and cost at the same time. Assembled with 630A Europe style cross type connector and bus bar connector, the bas bar system can be realized with multi-connection to the series of switch gears to optimize the connection solution. The length and the shape the connector for both Europe and American style can be tailor made according to your special requirements.

- 100% factory tested before shipment, quality guaranteed;
- With special designed bus bar to realize quick and easy installation;
- With compact design to fit different RMU and cable branch box with various requirements;
- Complete insulation,sealing,screened/unscreened and touchable/untouchable;
- Meet: IEC60502-4, GB/T 12706.4.

J Type Connector
(JCS-101/JCS-201)

Cross ype Connector
(CCS-101/CCS-201)

Bus-bar connector

Technical Data

Performance	JCS(CCS)-101	JCS(CCS)-201
Rated voltage	8.7/15（17.5）kV	12/20（24）kV
Max. operating voltage	17.5 kV	24 KV
Rated continuous current	630A	630A
Partial discharge	15kV/≤10pC	21kV/≤10pC
A.C withstand voltage	39kV/5min	54kV/5min

Design and structure (mm)

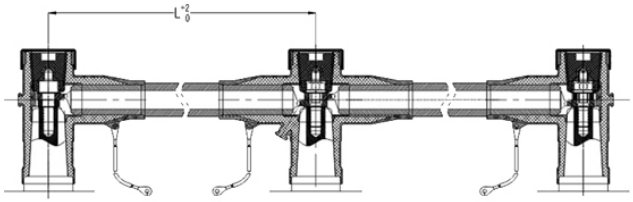

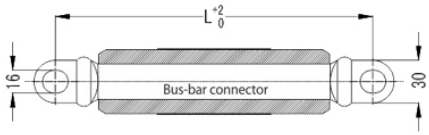

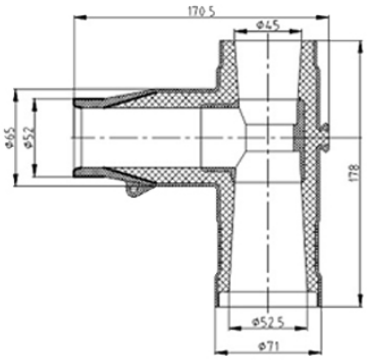

J Type Connector (S)

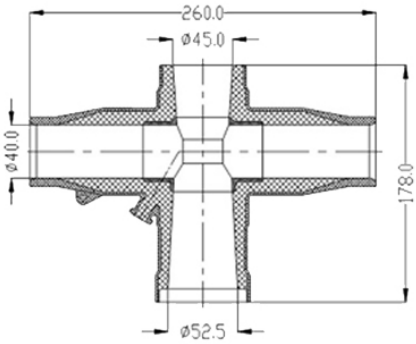

Cross type Connector (S)